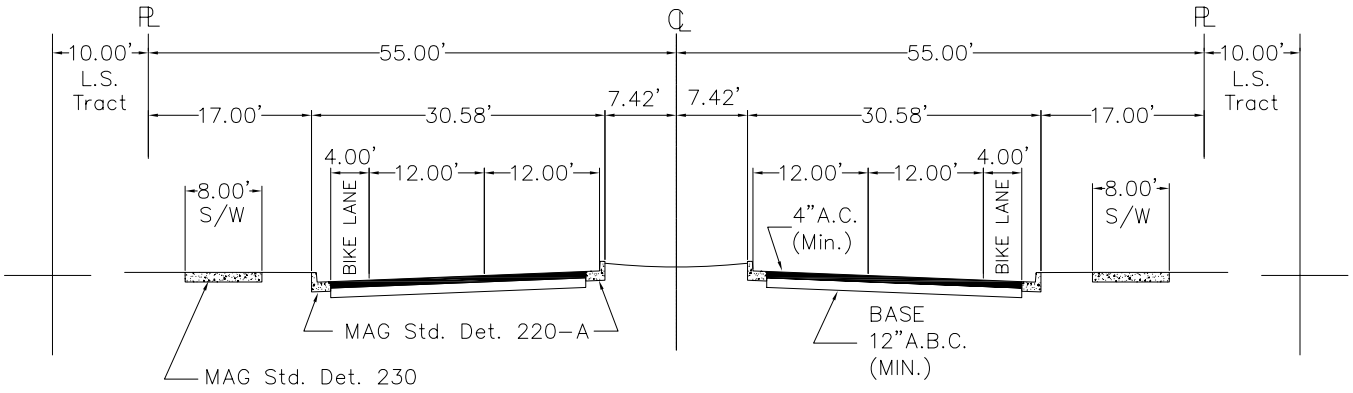

ARTERIAL STREET WITH BIKE LANE

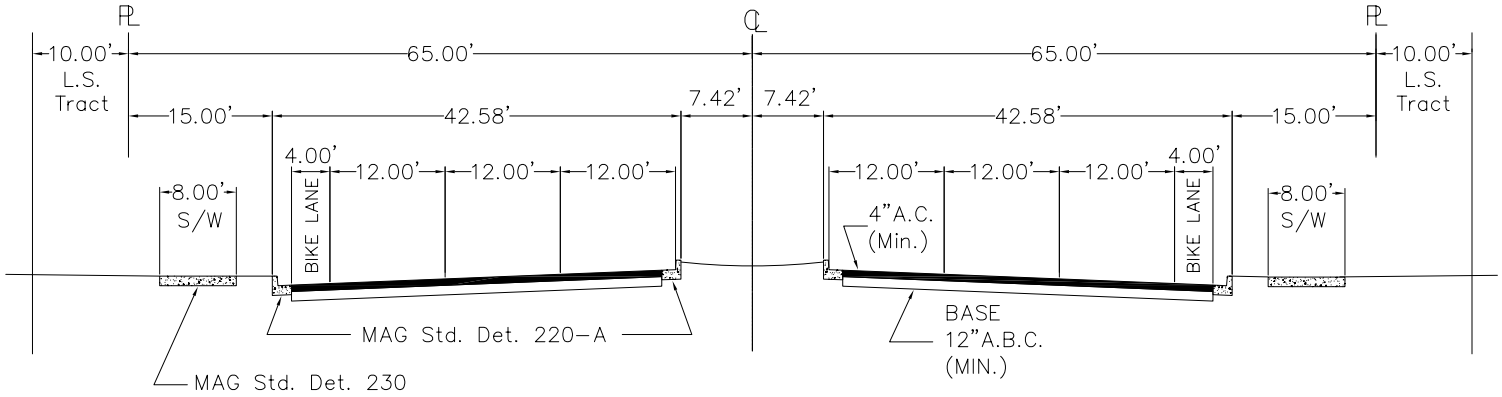

MAJOR ARTERIAL STREET WITH BIKE LANE

DETAIL NO.	CITY OF GOODYEAR STANDARD DETAIL	APPROVED BY: Goodyear Standards and Policies Committee 07/01	TYPICAL CROSS-SECTION FOR STREET CLASSIFICATION	DETAIL NO.
G-3122				G-3122