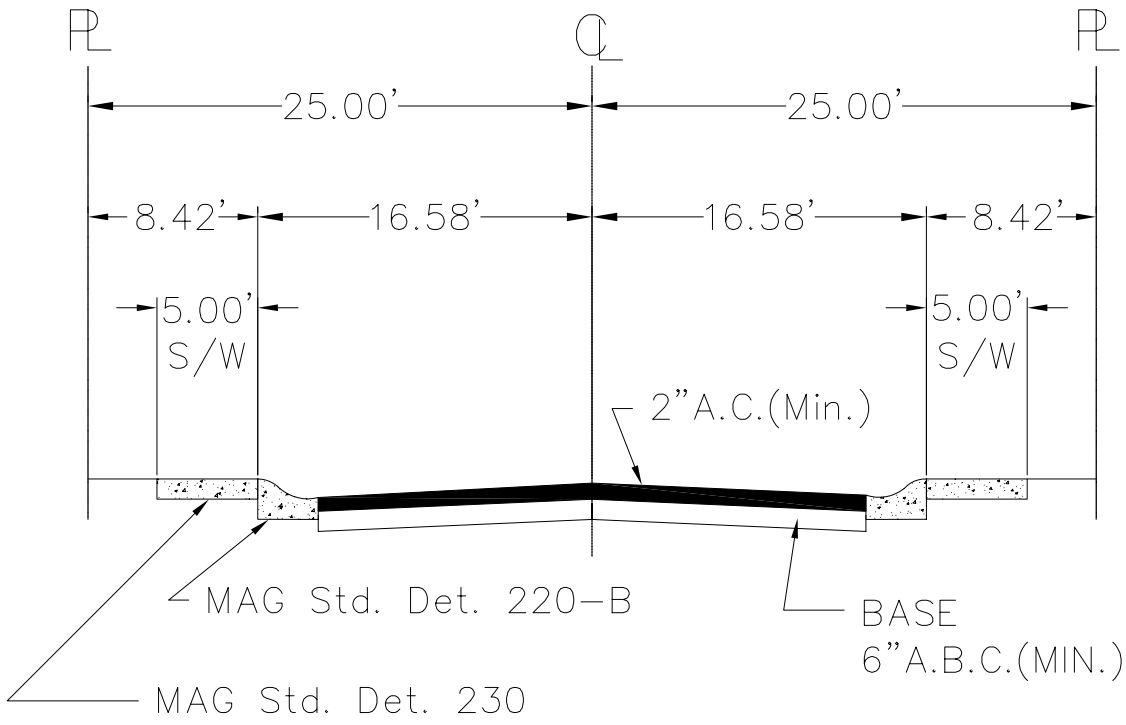

RESIDENTIAL STREET

DETAIL NO.	CITY OF GOODYEAR STANDARD DETAIL	APPROVED BY: Goodyear Standards and Policies Committee 7/00	TYPICAL CROSS-SECTION FOR STREET CLASSIFICATION	DETAIL NO.
G-3126-1				G-3126-1

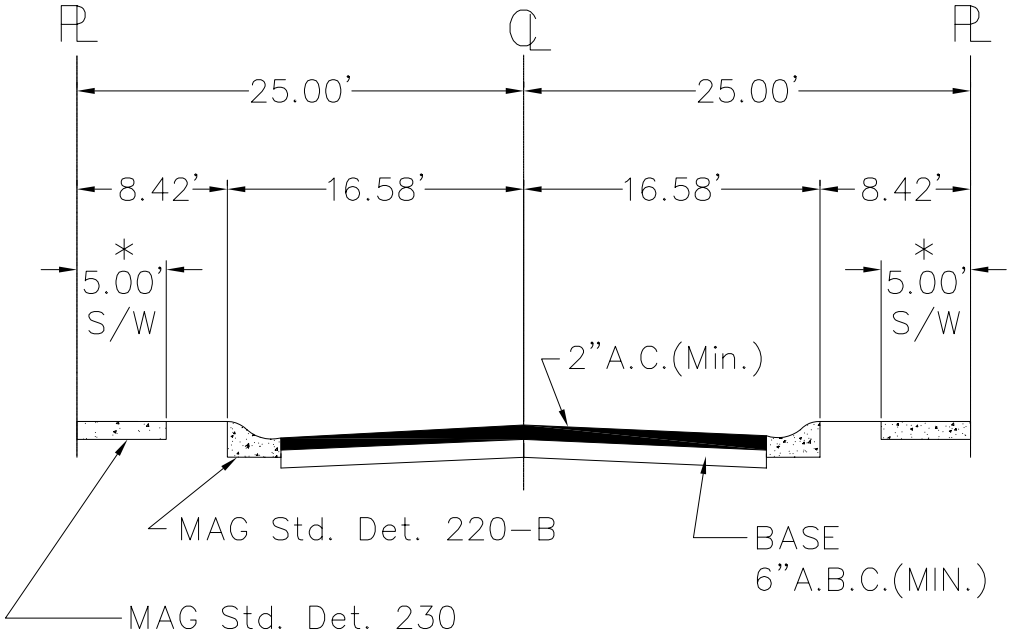

RESIDENTIAL STREET WITH DETACHED SIDEWALK

* NOTE: 5' SIDEWALK MAY ENCROACH UP TO 1' INTO THE P.U.E. ADJACENT TO THE RIGHT-OF-WAY, IN WHICH CASE A 9' P.U.E. SHALL BE REQUIRED UNLESS OTHERWISE APPROVED BY CITY ENGINEER.

DETAIL NO. G-3126-2	CITY OF GOODYEAR STANDARD DETAIL	APPROVED BY: Goodyear Standards and Policies Committee 7/00	TYPICAL CROSS-SECTION FOR STREET CLASSIFICATION	DETAIL NO. G-3126-2