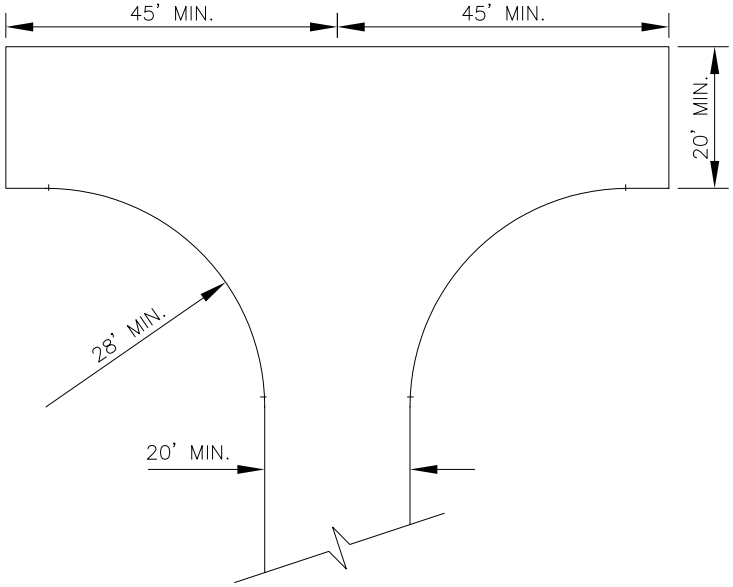

HAMMERHEAD

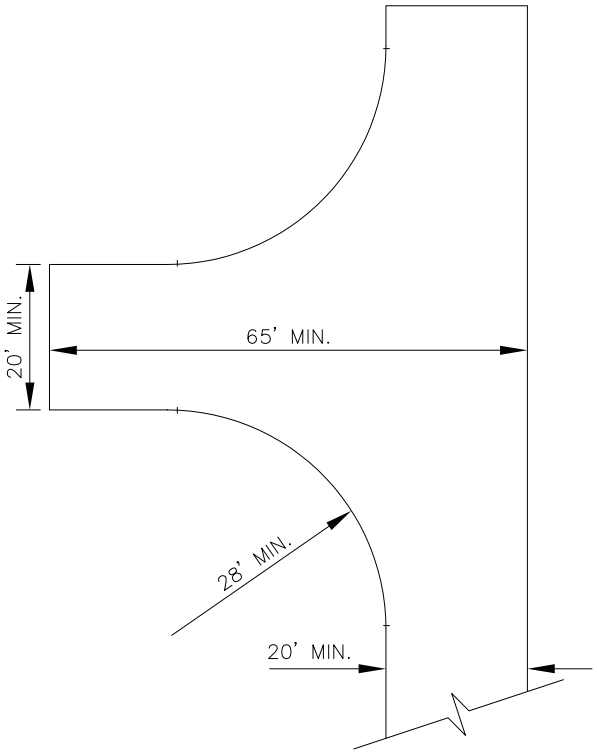

MODIFIED HAMMERHEAD

DETAIL NO. G-3242	CITY OF GOODYEAR STANDARD DETAIL	APPROVED BY: Goodyear Standards and Policies Committee 7/97	FIRE DEPT. ACCESS ROADWAY HAMMERHEAD / MODIFIED HAMMERHEAD	DETAIL NO. G-3242