Low Volume
M–1

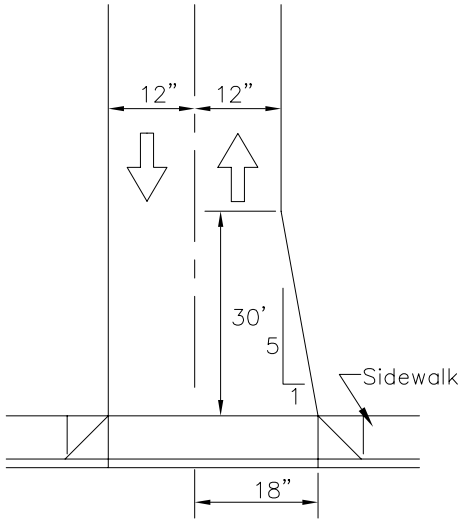

Multi–Family Units

High Volume
M–2

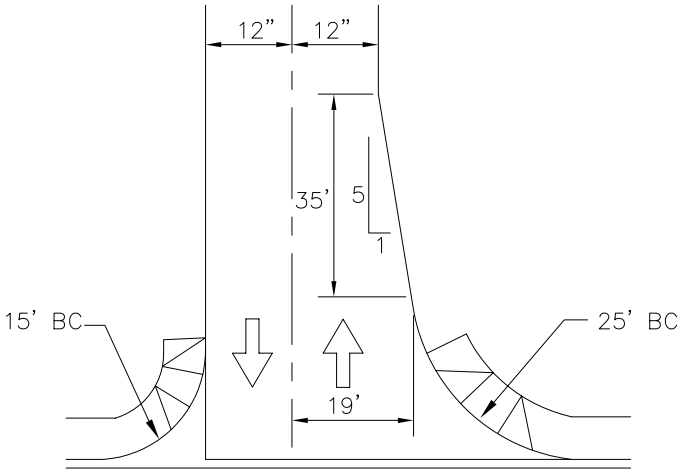

Multi–Family Units

S–1

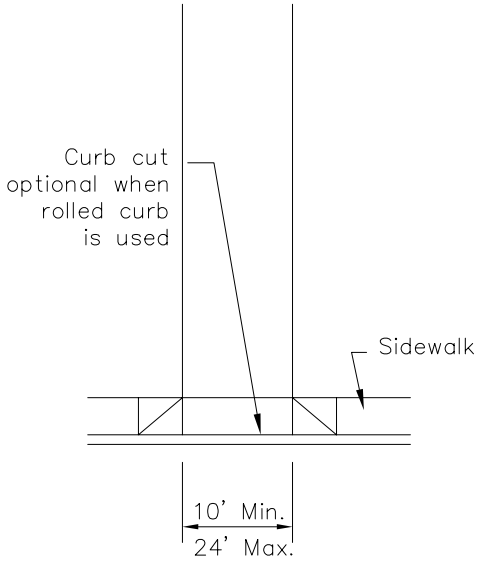

Single Family Unit

DETAIL NO. G-3254-1	CITY OF GOODYEAR STANDARD DETAIL	APPROVED BY: Goodyear Standards and Policies Committee 7/97	RESIDENTIAL DRIVEWAYS	DETAIL NO. G-3254-1

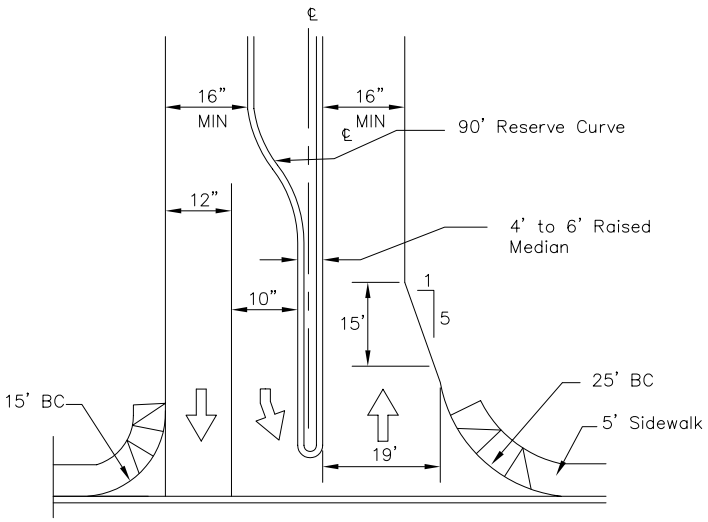

Two Way with Two Egress Lanes
CH–2

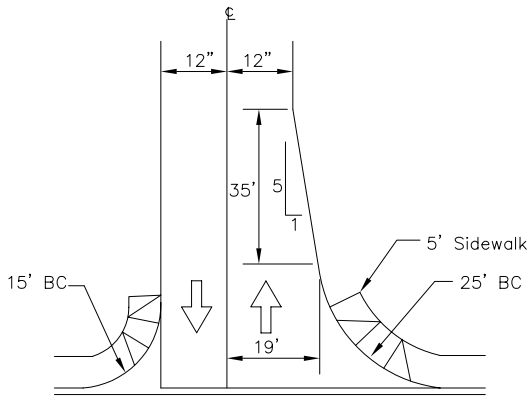

Two Way
CH–1

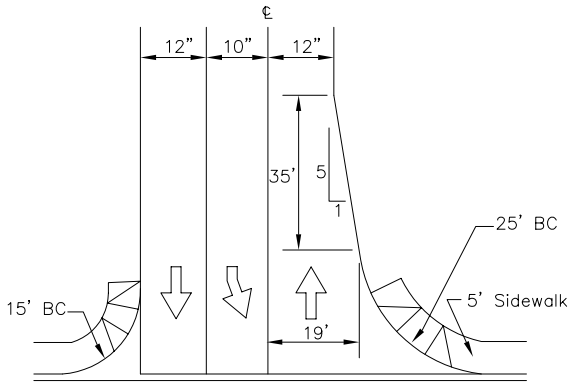

Two Way with Two Egress Lanes
CH–2

DETAIL NO. G-3254-2	CITY OF GOODYEAR STANDARD DETAIL	APPROVED BY: Goodyear Standards and Policies Committee 7/97	COMMERCIAL/INDUSTRIAL DRIVEWAYS - TYPE CH	DETAIL NO. G-3254-2

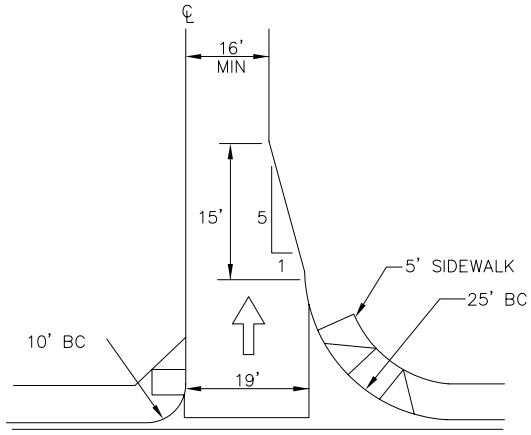

ONE WAY INGRESS
CI–1

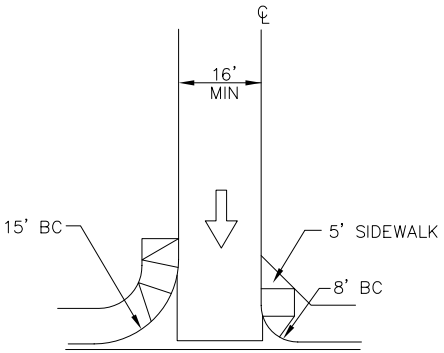

ONE WAY INGRESS
CI–2

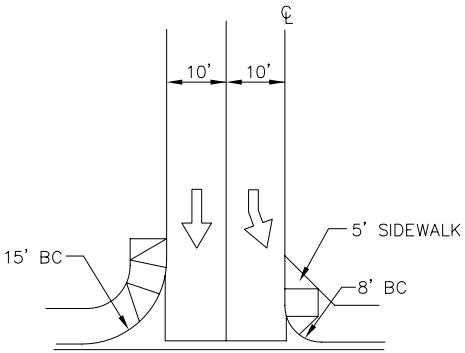

TWO LANES, ONE WAY EGRESS
CI–3

DETAIL NO.	CITY OF GOODYEAR STANDARD DETAIL	APPROVED BY: Goodyear Standards and Policies Committee 7/97	COMMERCIAL/INDUSTRIAL DRIVEWAYS - TYPE CI	DETAIL NO.
G-3254-3				G-3254-3