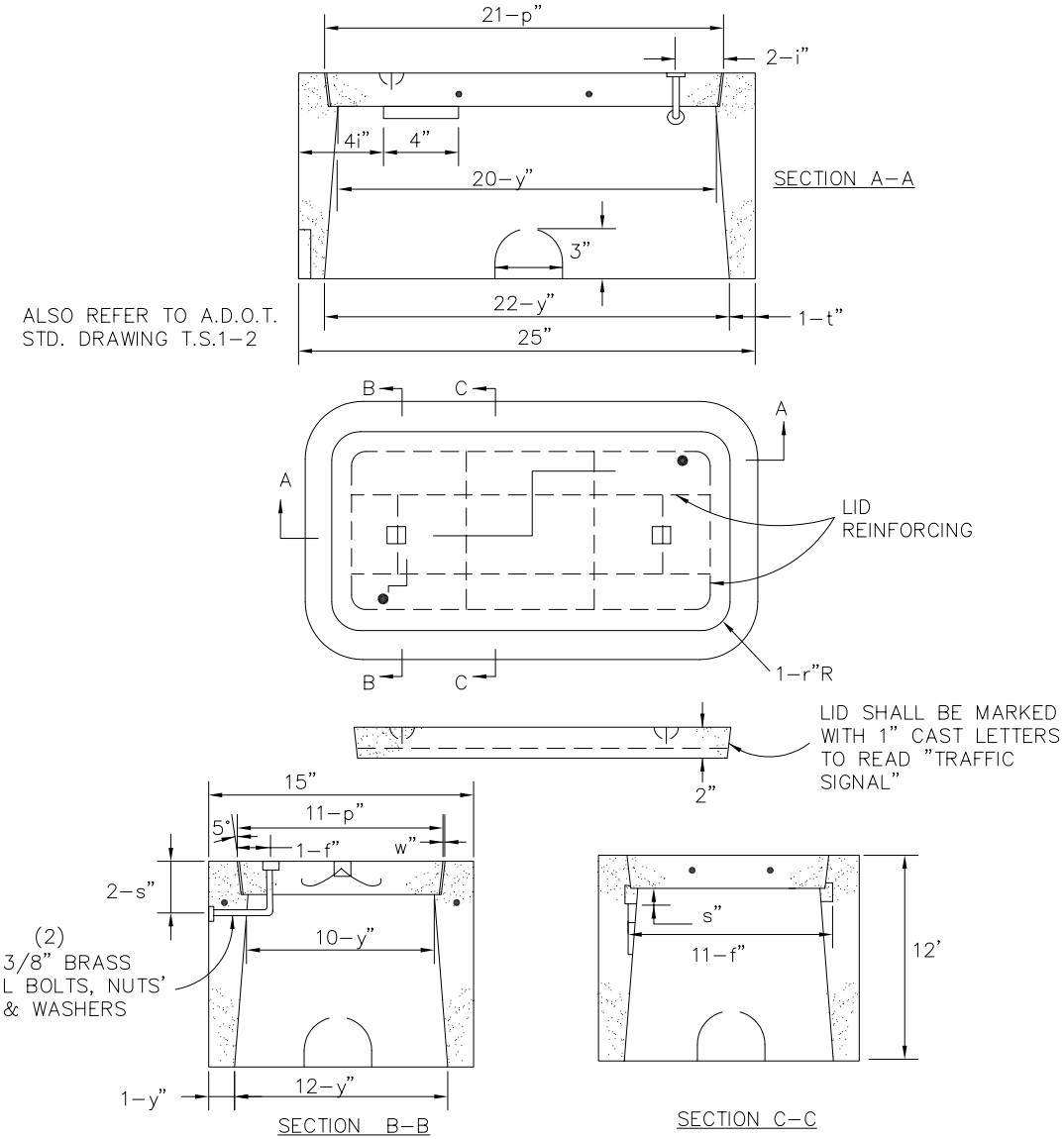

DETAIL NO. G-3261	CITY OF GOODYEAR STANDARD DETAIL	APPROVED BY: Goodyear Standards and Policies Committee 7/97	SIGNAL EQUIPMENT STANDARD TYPE 5 PULL BOX	DETAIL NO. G-3261