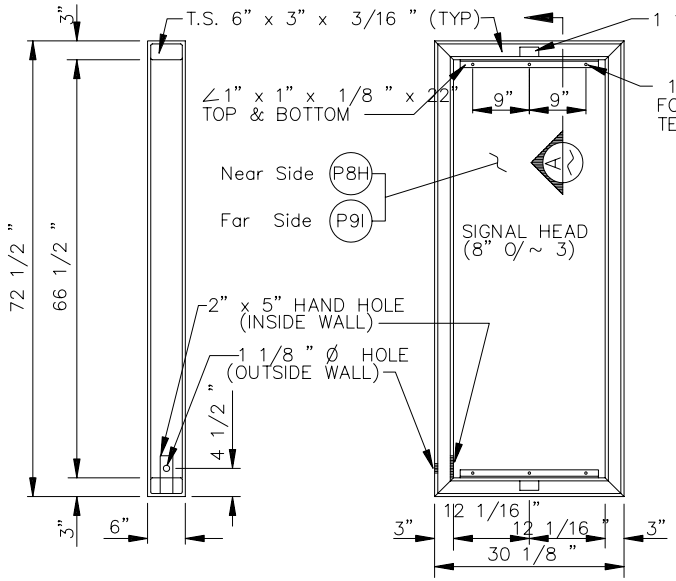

ADD–ON STRUCTURE 1

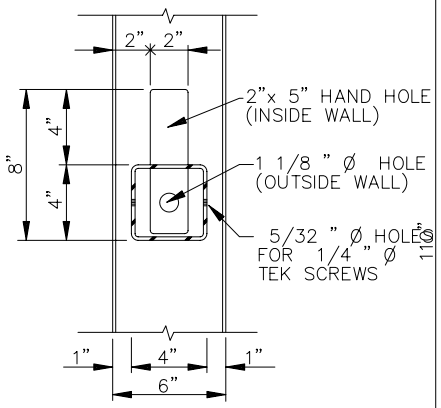

SECTION B

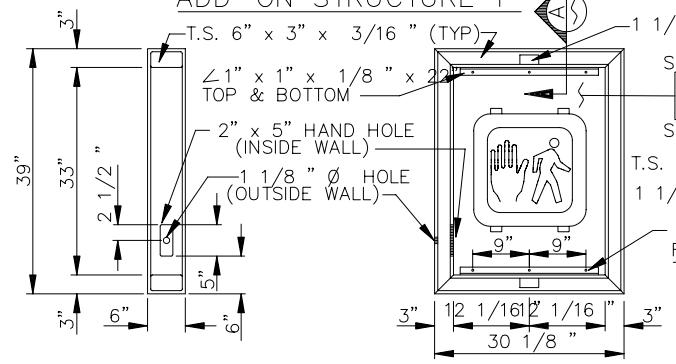

ADD–ON STRUCTURE 2

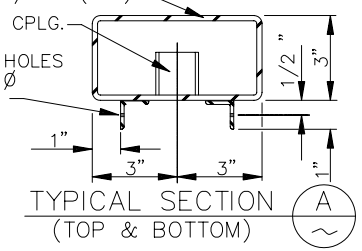

TYPICAL SECTION A
(TOP & BOTTOM)

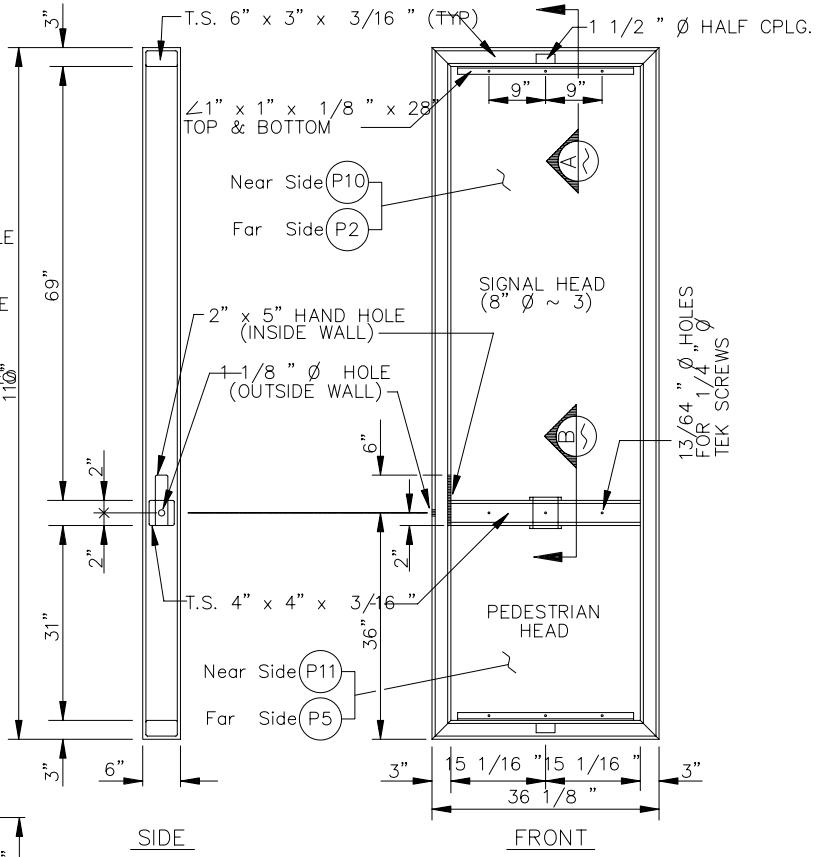

ADD–ON STRUCTURE 3

DETAIL NO. G–3266	CITY OF GOODYEAR STANDARD DETAIL	APPROVED BY: Goodyear Standards and Policies Committee 7/97	MODULAR SIGNAL ADD–ON STRUCTURES	DETAIL NO. G–3266