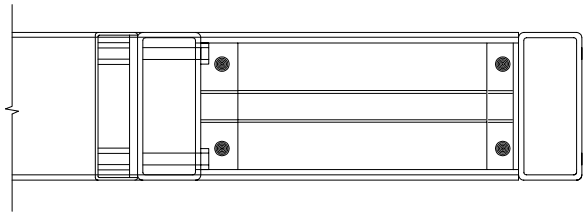

SECTION A

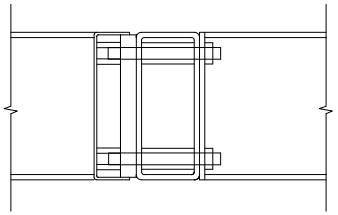

SECTION B

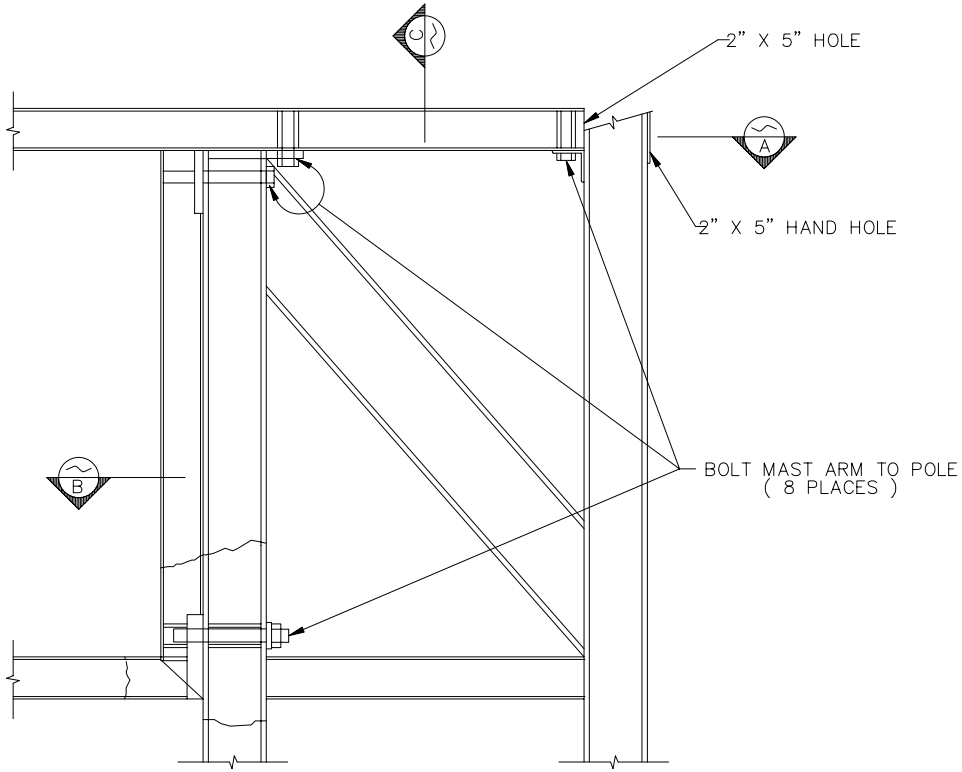

MAST ARM CONNECTION DETAIL

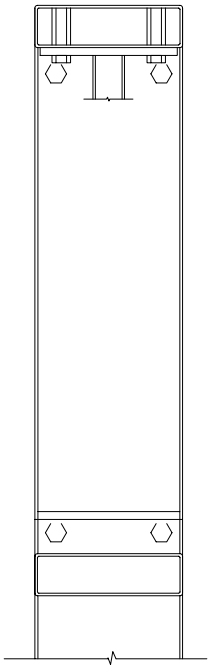

SECTION C

DETAIL NO. G-3267	CITY OF GOODYEAR STANDARD DETAIL	APPROVED BY: Goodyear Standards and Policies Committee 7/97	MODULAR POLE MAST ARM CONNECTION	DETAIL NO. G-3267