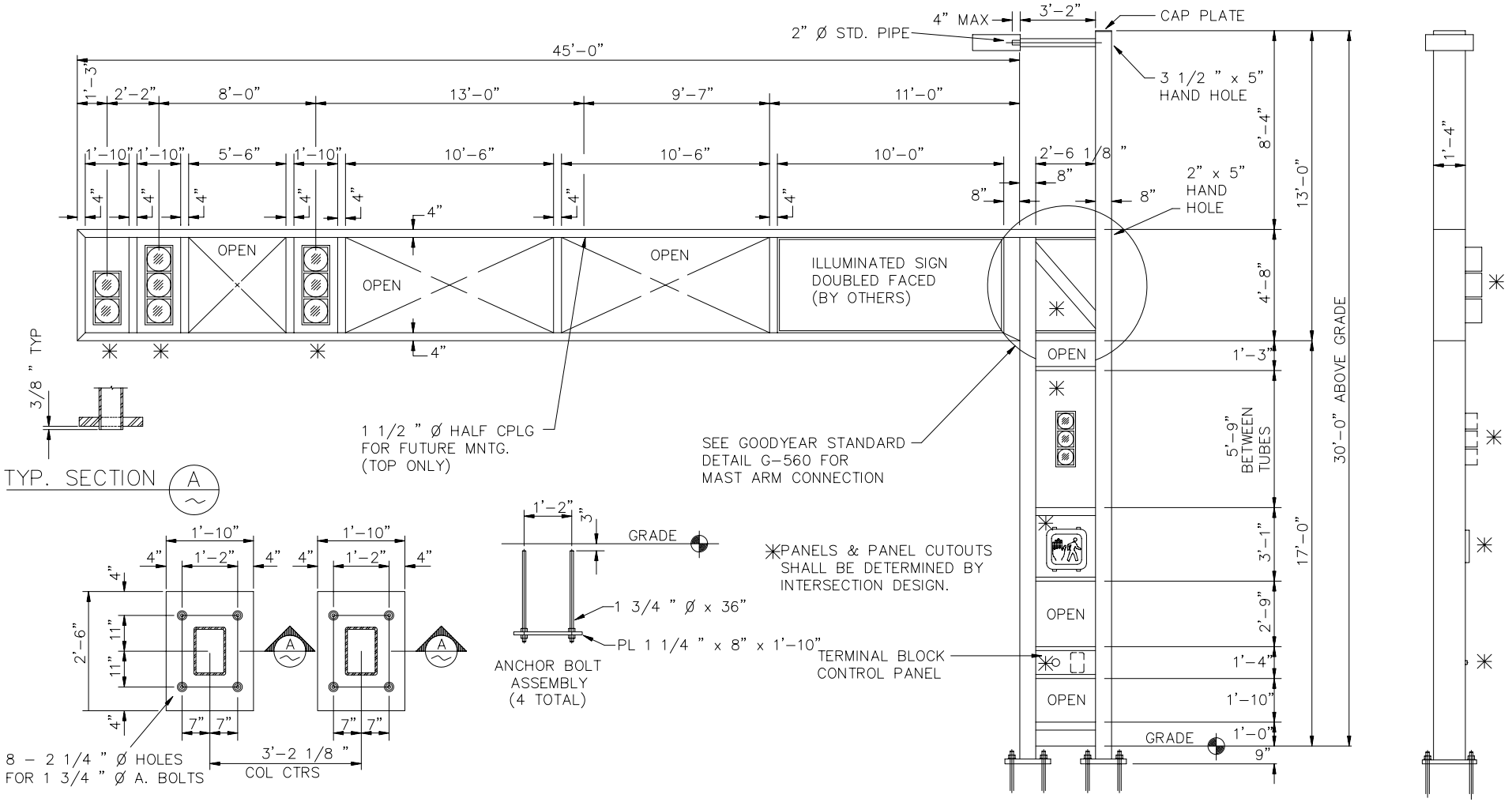

CITY OF GOODYEAR

MODULAR POLE 'Q' – 45' MAST ARM

DETAIL NO.	CITY OF GOODYEAR STANDARD DETAIL	APPROVED BY: Goodyear Standards and Policies Committee 7/97	MODULAR POLE 'Q' - 45' MAST ARM	DETAIL NO.
G-3280				G-3280