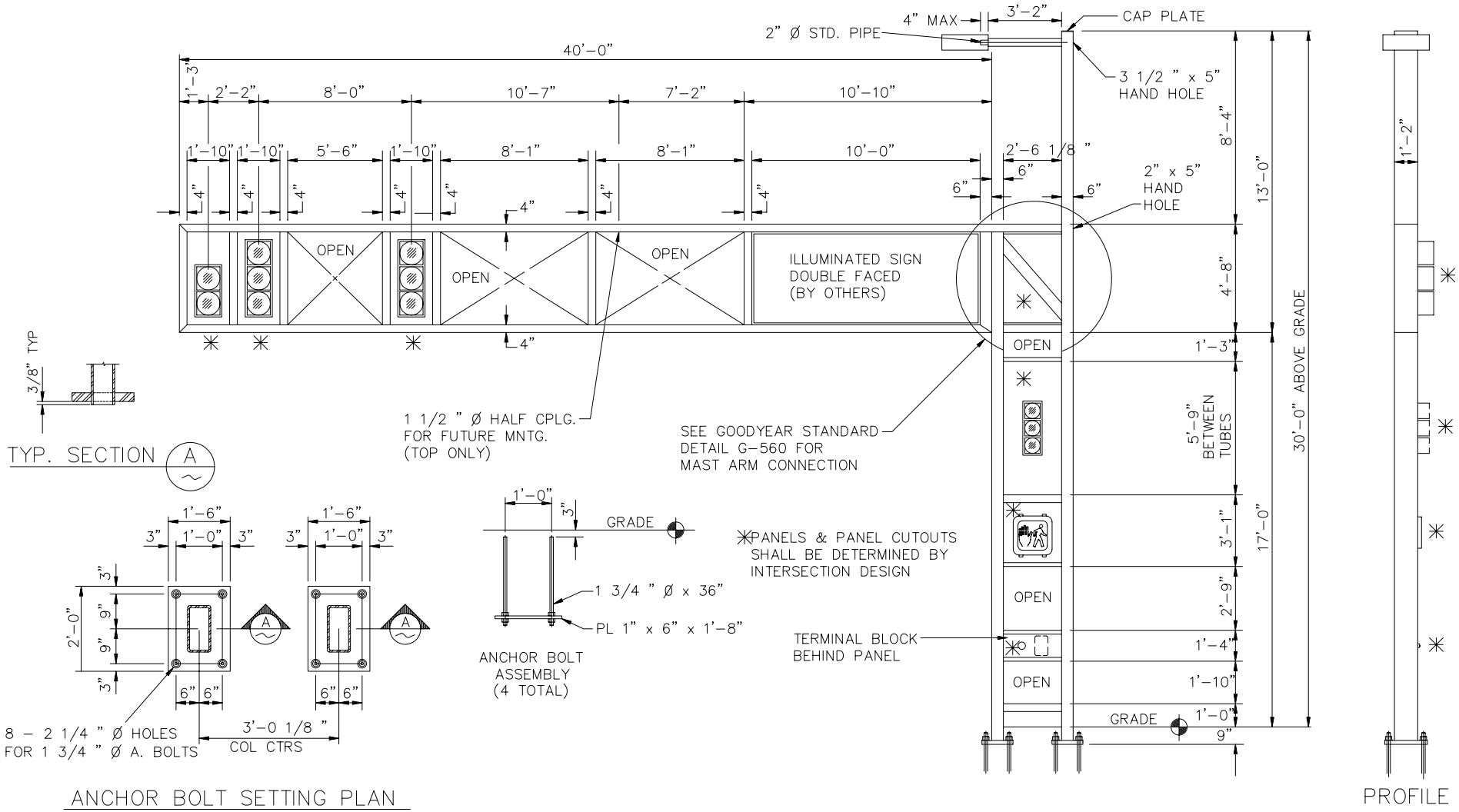

DETAIL NO.	CITY OF GOODYEAR STANDARD DETAIL	APPROVED BY: Goodyear Standards and Policies Committee 7/97	MODULAR POLE 'Q' - 40' MAST ARM	DETAIL NO.
G-3282				G-3282