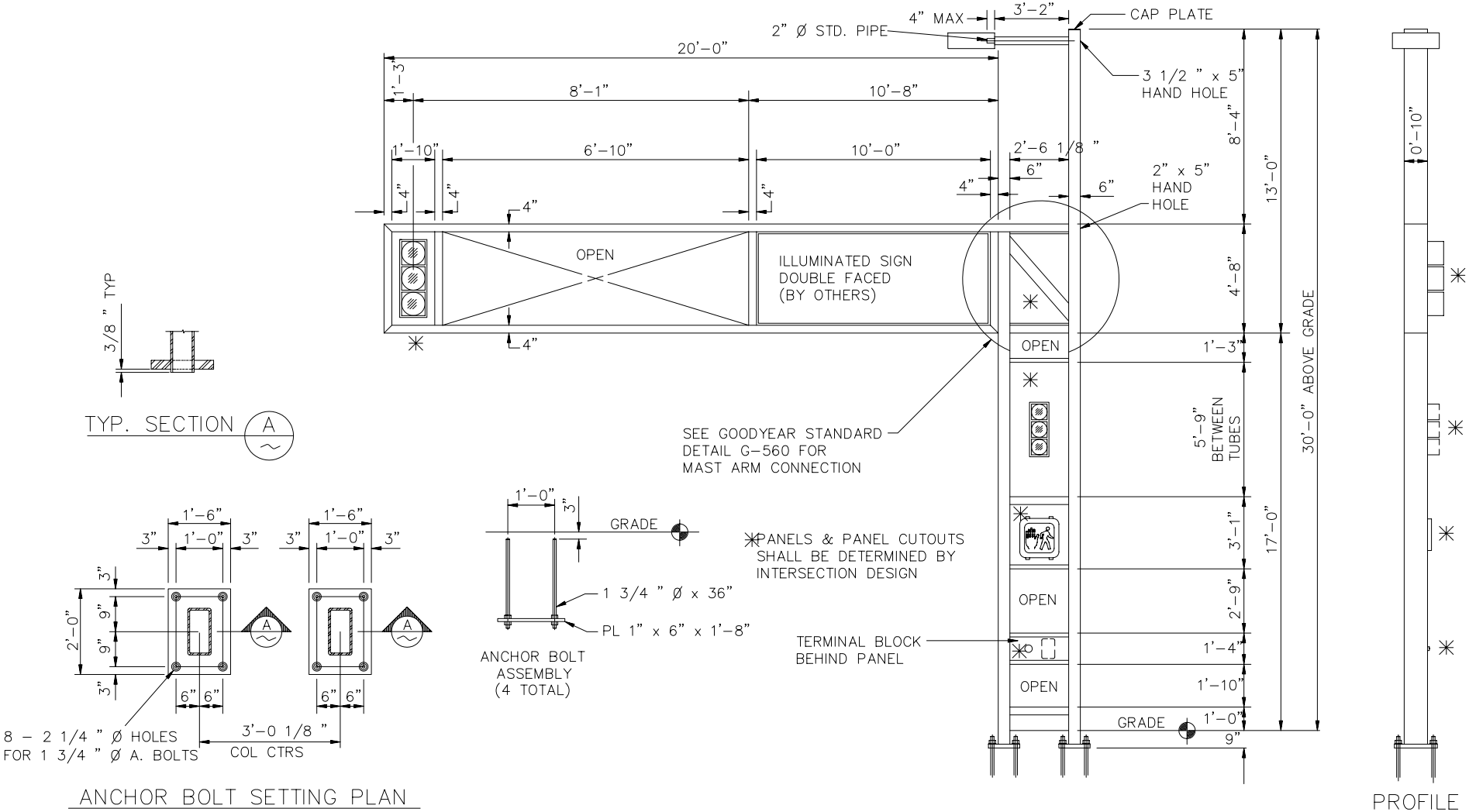

DETAIL NO.	CITY OF GOODYEAR STANDARD DETAIL	APPROVED BY: Goodyear Standards and Policies Committee 7/97	MODULAR POLE 'F' - 20' MAST ARM	DETAIL NO.
G-3286				G-3286