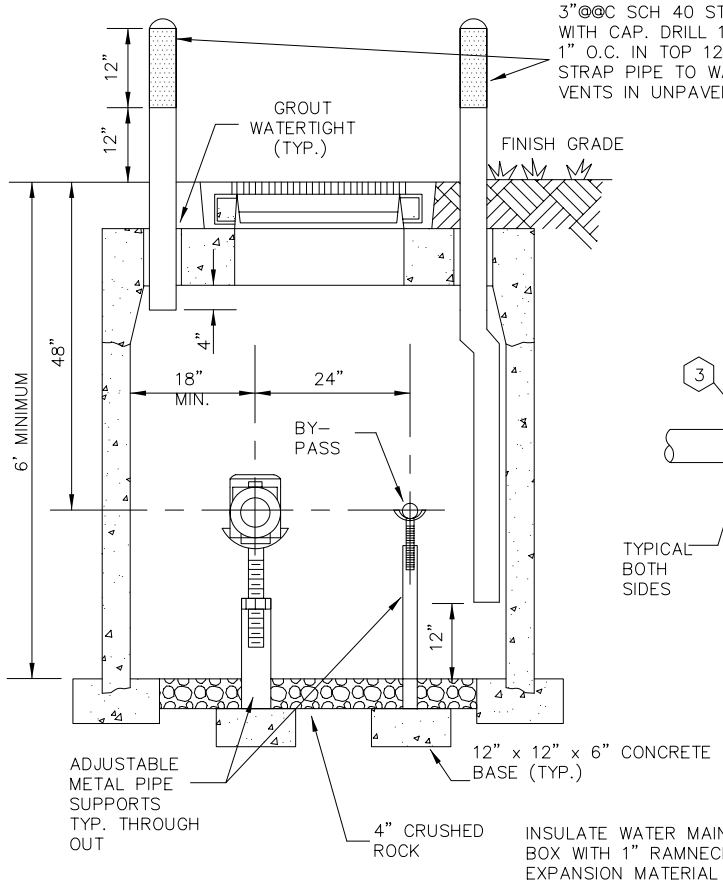

SECTION A–A

NOTE: METER VAULTS MAY BE EITHER BLOCK MASONARY OR CAST–IN–PLACE OR PRE–CAST CONCRETE, SEE MAG STD DETAIL 321 FOR VAULT CONSTRUCTION.

VAULT DIMENSIONS TABLE			
MAIN SIZE	3"	4"	6"
(A)	8'–4"	10'–6"	12'–0"
(B)	4'–6"	5'–0"	5'–0"

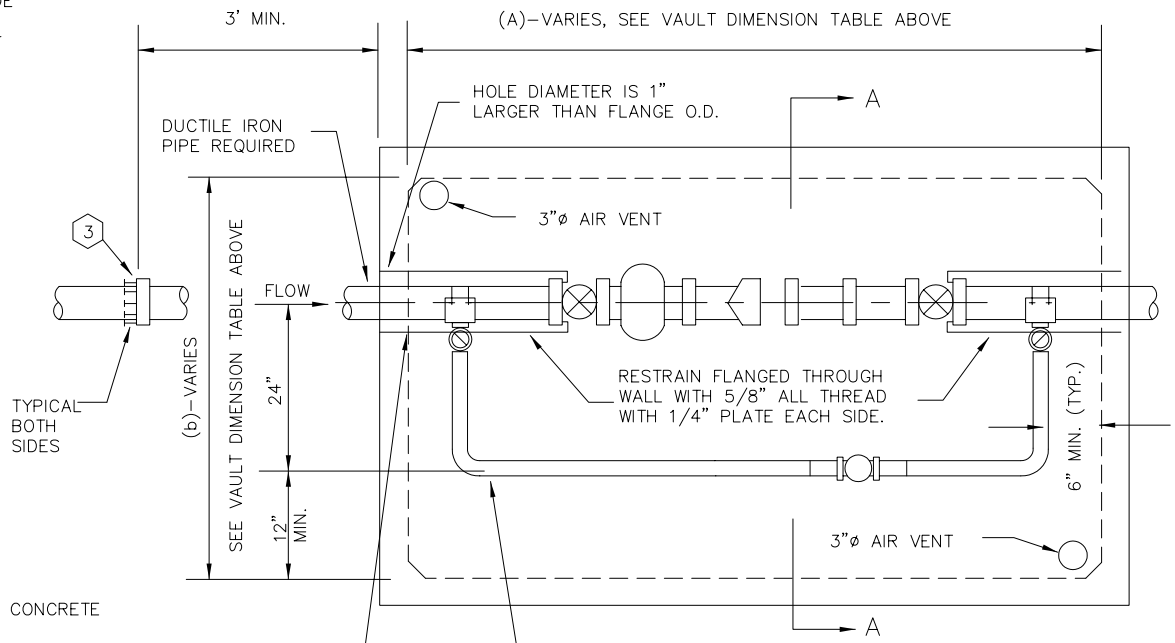

INSULATE WATER MAIN FROM CONCRETE BOX WITH 1" RAMNECK OR OTHER EXPANSION MATERIAL APPROVED BY THE ENGINEER. GROUT BALANCE OF OPENING PER MAG SPECIFICATIONS.

EXCEPT FOR 2" COPPER BYPASS ALL FITTINGS WILL BE FLANGED. UNIFLANGE NOT ACCEPTABLE UNLESS APPROVED BY WATER OPERATIONS. 2" COPPER BYPASS WILL BE JOINED WITH SILVER SOLDER EXCEPT AT 2" CORP STOP WHICH WILL BE PAC JOINT.

PLAN

VAULT INSTALLATION

DETAIL NO.	CITY OF GOODYEAR STANDARD DETAIL	APPROVED BY: Goodyear Standards and Policies Committee 7/97	3", 4", 6" WATER METER	DETAIL NO.
G-3313-1				G-3313-1

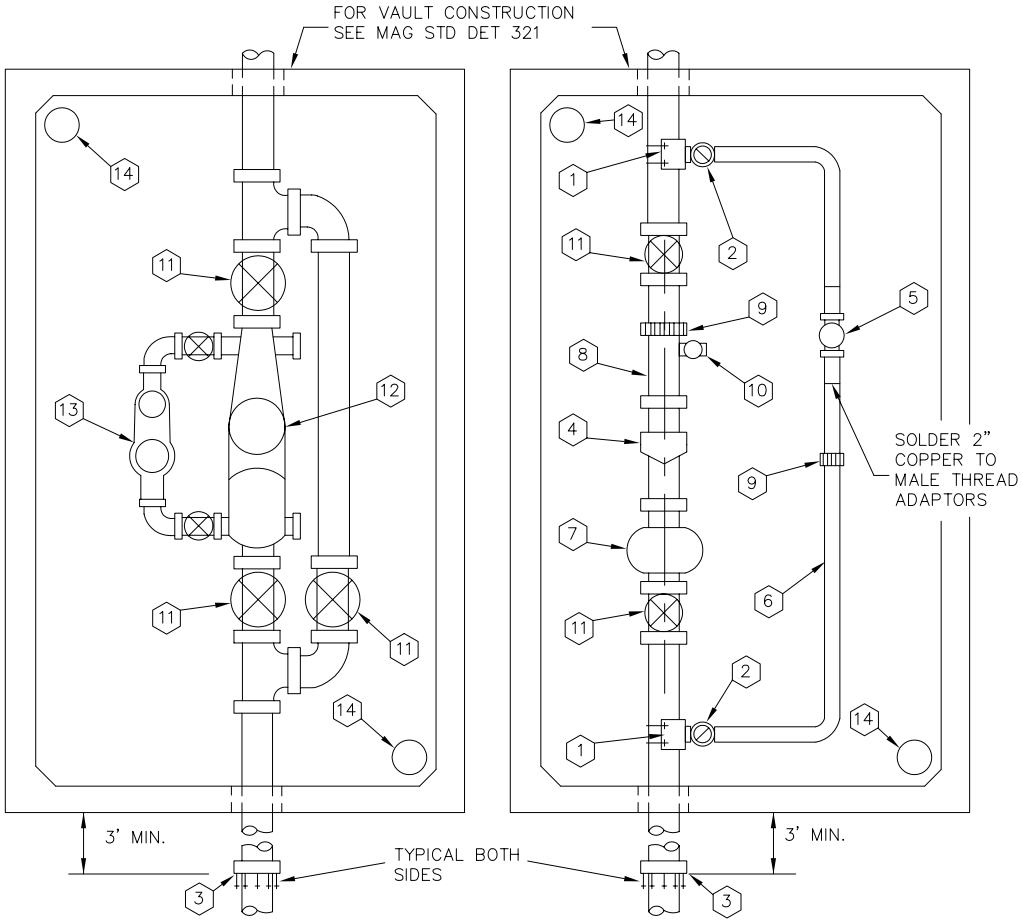

COMBINATION DOMESTIC/
FIRE LINE METER

COMPOUND/TURBINE METER

KEY NOTES

1. DOUBLE STRAP ALL BRONZE SERVICE SADDLE, OR FLANGED x FLANGED TEE WITH FLANGED x FLANGED VALVE FOR SIZES 3" OR LARGER
2. CORP. STOP 2" (BALL TYPE), OR R.W. GATE VALVE WITH NON-RISING STEM HANDWHEEL OPERATOR FOR 3" OR LARGER.
3. ADAPTOR, FLANGED TO MECH. JOINT FOR A.C.P.
4. TURBOMETER, SENSUS SERIES "W" OR HERSEY SERIES "MHR" OR NEPTUNE TRIDENT TURBINE.
5. BRONZE CHECK VALVE FOR 2" LINE, CAST IRON WITH COUNTERWEIGHT FOR 3" LINES AND LARGER. (SAME SIZE AS BY-PASS LINE)
6. 2" RIDGED TYPE "K" COPPER BY-PASS LINE, 3" OR LARGER TO BE DUCTILE IRON. NOT LES THAN ONE PIPE SIZE SMALLER THAN METER IN NOTE 4.
7. STRAINER, SUPPLIED WITH METER.
8. FLANGED SPOOL, (3 PIPE DIAMETERS IN LENGTH, MIN.)
9. PROVIDE VICTAULIC COUPLING OR APPROVED EQUAL FOR ALL LINES 3" OR LARGER.
10. 2" THREADED OUTLET AND BALL VALVE NOT NEEDED IF VERTICAL TEST VALVE IS PROVIDED ON METER.
11. RESILIENT WEDGE GATE VALVE, FLANGED, WITH HAND WHEEL, OPEN LEFT, WITH NON-RISING STEM.
12. TURBOMETER U.L. APPROVED: SENSUS W-5000 DR OR W-2000 DR OR HERSEY FM-CT OR NEPTUNE TURBINE-FS-UL.
13. 2" TURBINE METER: SENSUS "W-160" OR HERSEY "MHR" OR NEPTUNE TRIDENT TURBINE.
14. 3"ø AIR VENT, SEE SHEET 1 OF 2.

NOTES

1. FOR LARGER METERS SPECIAL VAULT DESIGN IS REQUIRED.
2. USE OF REMOTE READING DEVICE AT OPTION OF UTILITY.
3. AN APPROVED BACKFLOW PREVENTION ASSEMBLY SHALL BE REQUIRED DOWNSTREAM OF THE WATER METER. CONTACT WATER RESOURCES, BACKFLOW PREVENTION FOR SPECIFIC INFORMATION.

DETAIL NO.	CITY OF GOODYEAR STANDARD DETAIL	APPROVED BY: Goodyear Standards and Policies Committee 7/97	3", 4", 6" WATER METER	DETAIL NO.
G-3313-2				G-3313-2