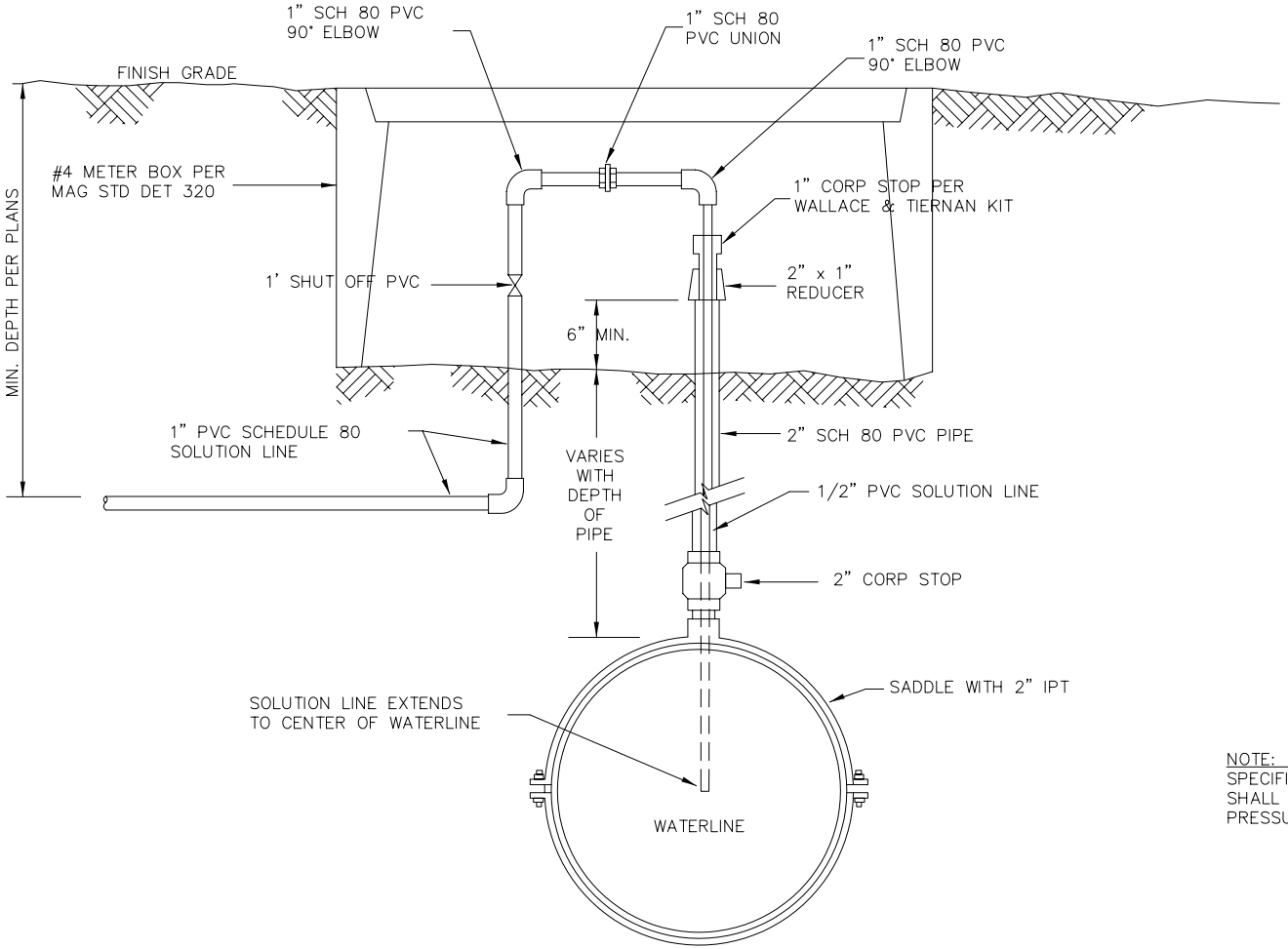

NOTE:
SPECIFICATIONS ON ALL FITTINGS SHALL EXCEED THE MAXIMUM PRESSURES OF THE SYSTEM.

DETAIL NO.	CITY OF GOODYEAR STANDARD DETAIL	APPROVED BY: Goodyear Standards and Policies Committee 7/97	CHLORINE INJECTION TAP FOR UNDERGROUND WATERLINE	DETAIL NO.
G-3315				G-3315