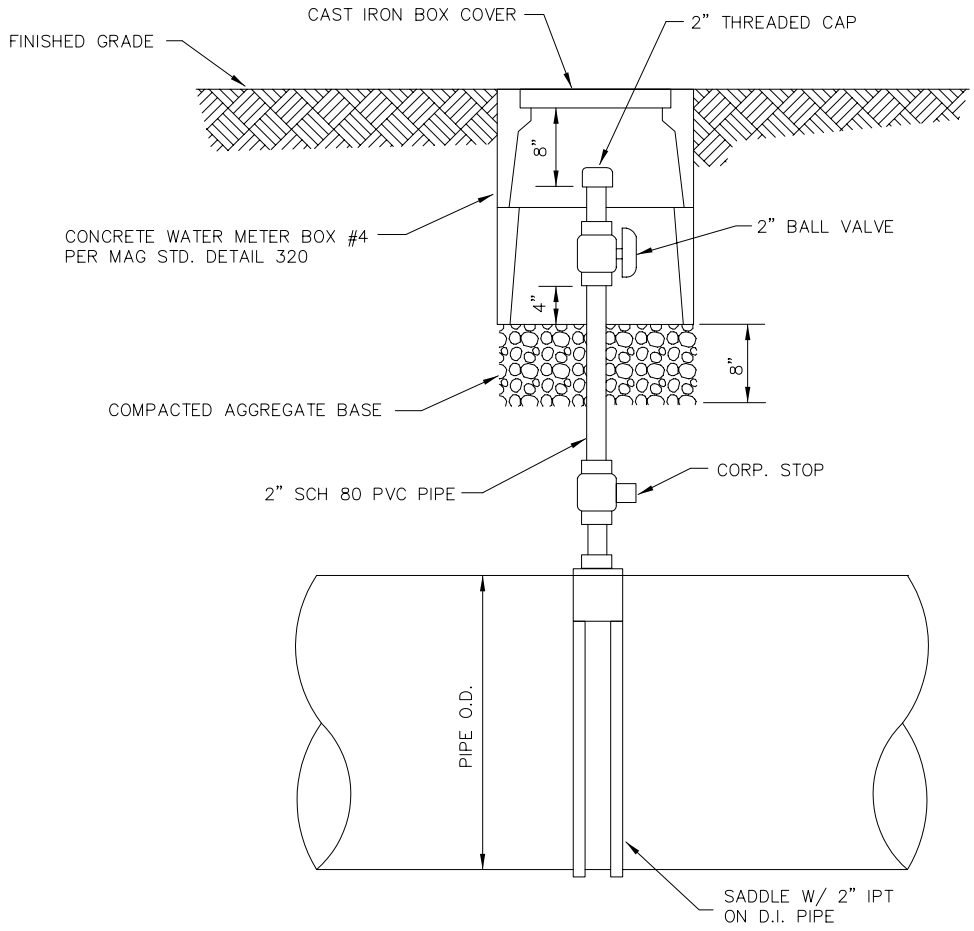

DETAIL NO. G-3316	CITY OF GOODYEAR STANDARD DETAIL	APPROVED BY: Goodyear Standards and Policies Committee 7/97	TAP FOR FUTURE CHLORINE INJECTION	DETAIL NO. G-3316