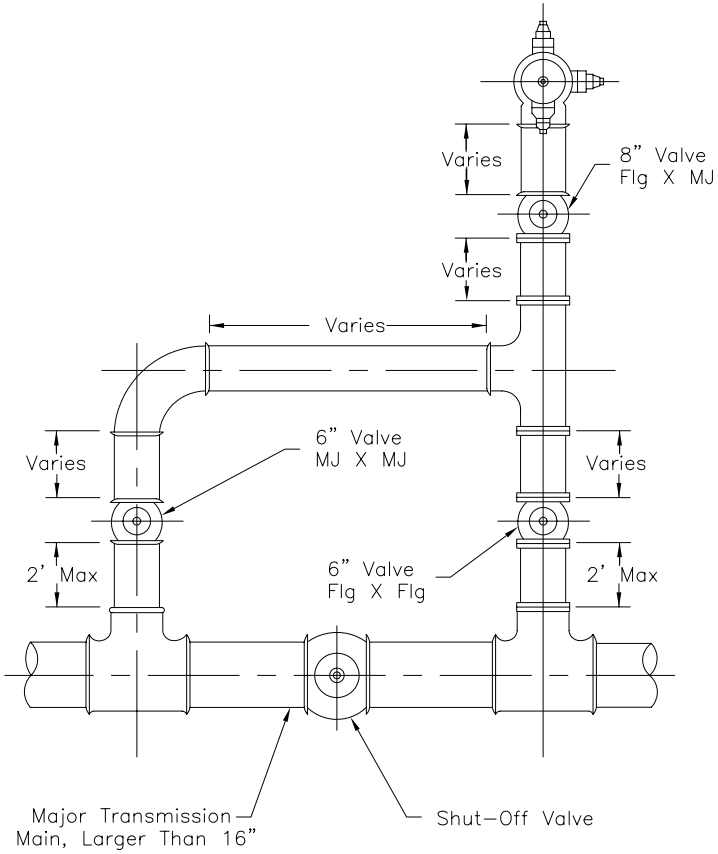

NOTES

1. All joints in hydrant run-out to be restrained joints.
2. See Std. Detail G-3320 & G-3321 for valve box installation.
3. For water valve blocking see MAG Std. Detail 301.
4. For additional information see Std. Detail G-3330.

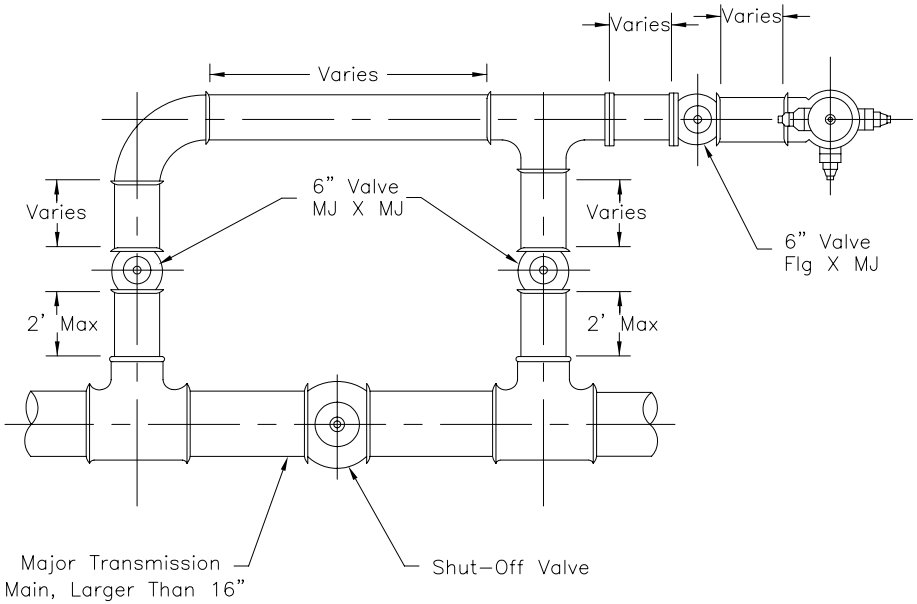

DETAIL NO.	CITY OF GOODYEAR STANDARD DETAIL	APPROVED BY: Goodyear Standards and Policies Committee 7/97	FIRE HYDRANT BYPASS ASSEMBLY	DETAIL NO.
G-3336				G-3336