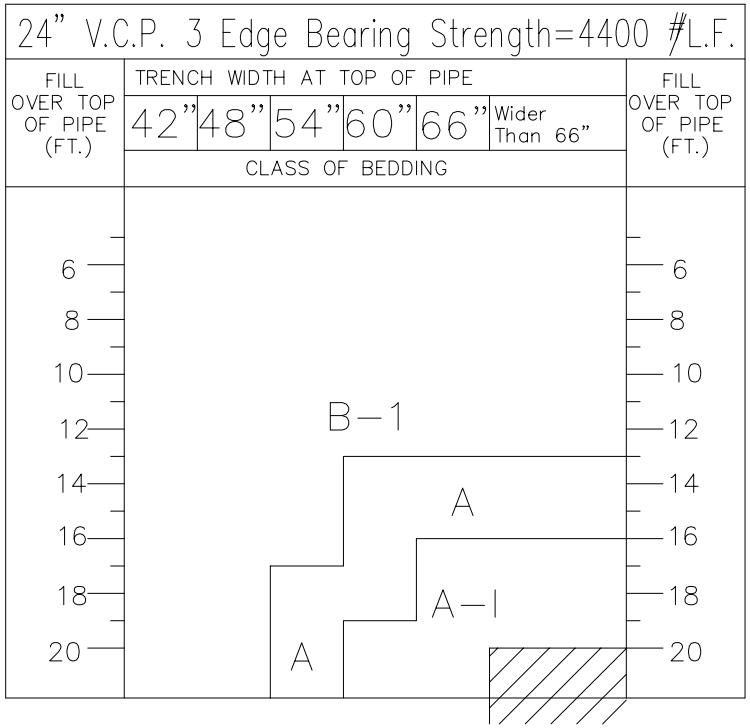

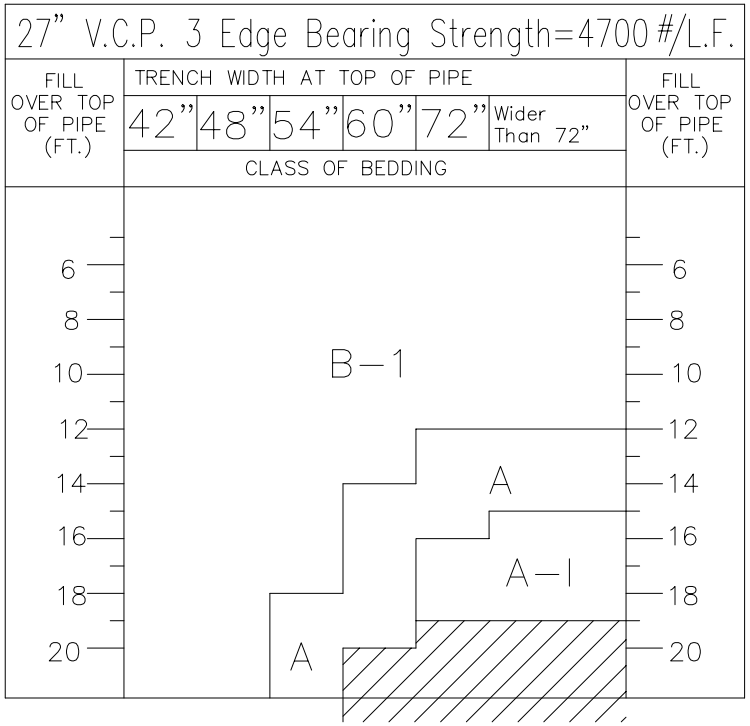

SEE DETAIL G-3420 FOR BEDDING DETAILS

REQUIRES DESIGN ACTION

DETAIL NO.				DETAIL NO.
G-3424	CITY OF GOODYEAR STANDARD DETAIL	APPROVED BY: Goodyear Standards and Policies Committee 7/97	24" & 27" V.C.P. TRENCH LOADING	G-3424