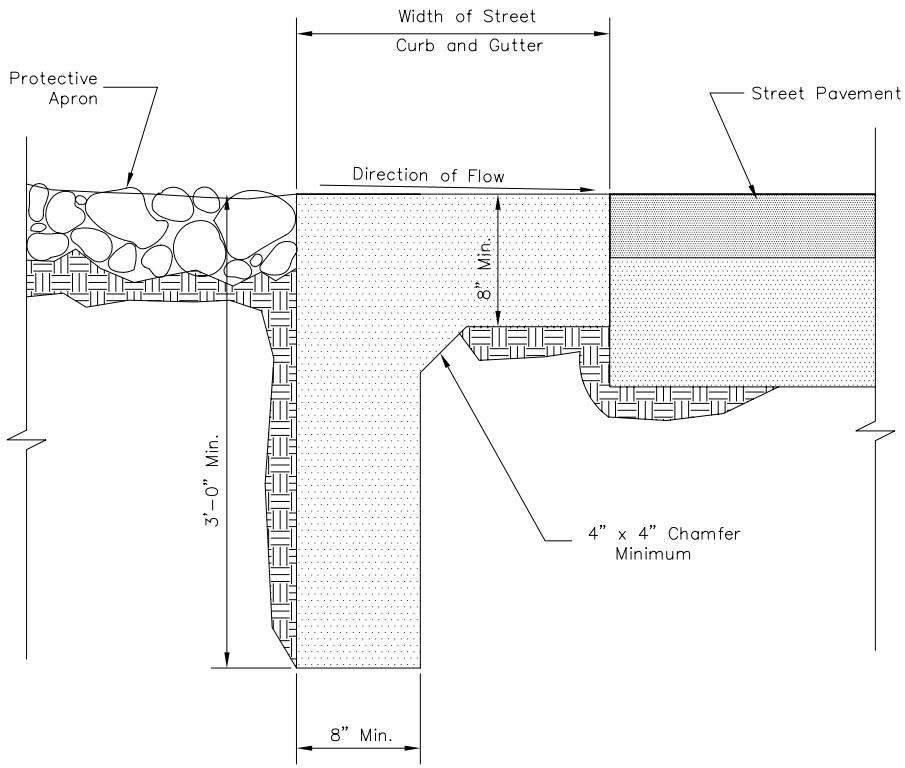

DETAIL NO.	CITY OF GOODYEAR STANDARD DETAIL	APPROVED BY: Goodyear Standards and Policies Committee 7/97	CUT-OFF WALL	DETAIL NO.
G-3520				G-3520

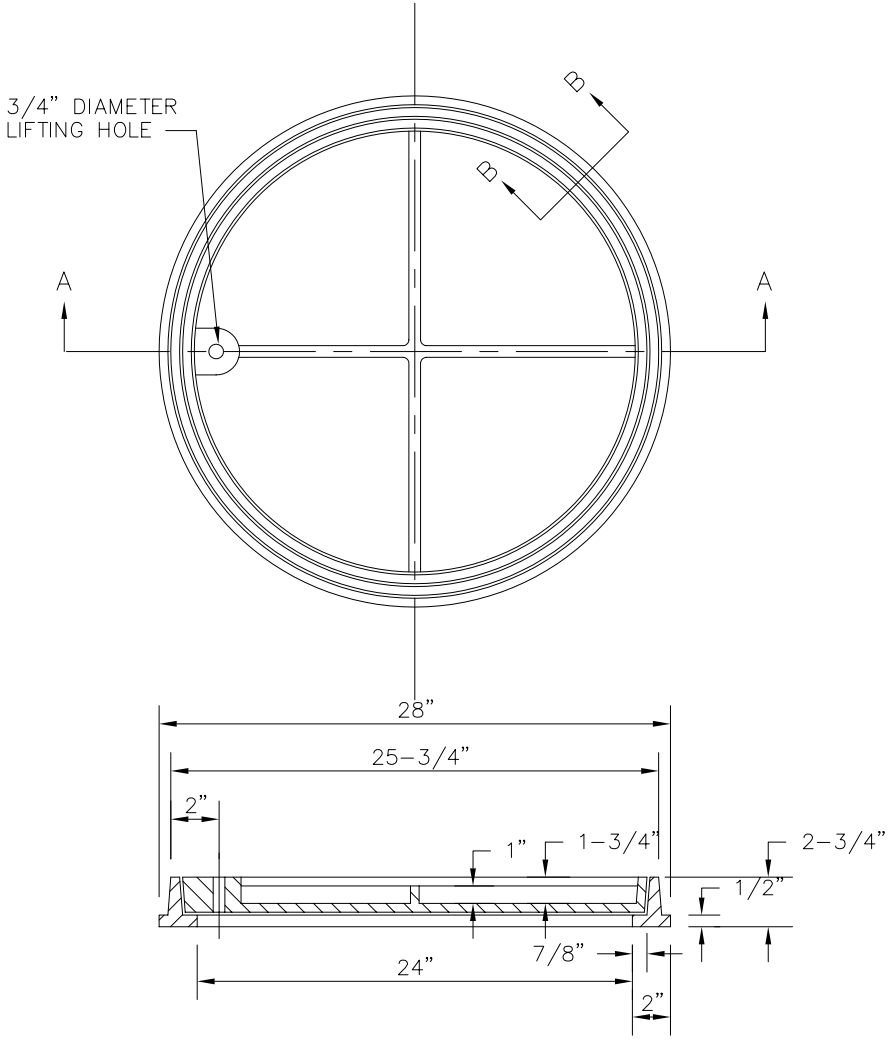

SECTION A–A

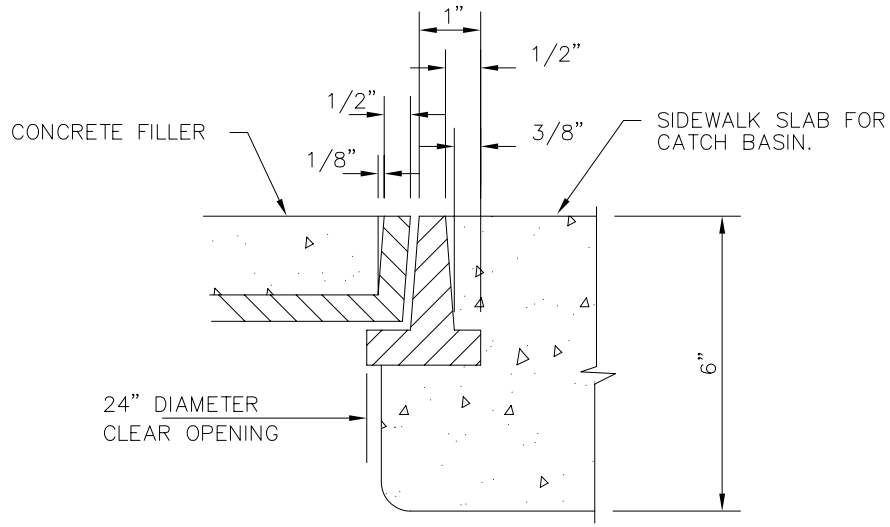

SECTION B–B

NOTES

1. COVER SHALL BE NON–LOCKING
2. FRAME AND COVER SHALL BE CAST IRON OR STRUCTURAL STEEL.
3. CATCH BASIN ACCESS FRAME AND COVER IS FOR USE IN SIDEWALK AREA ONLY.
4. COVER SHALL BE FILLED WITH CONCRETE AND BROOM FINISHED.
5. SMALL VARIATIONS IN DIMENSIONS OR FEATURES OF A MINOR NATURE THAT ARE PART OF THE FOUNDRY'S STANDARD CASTING ARE PERMISSIBLE.

DETAIL NO.	CITY OF GOODYEAR STANDARD DETAIL	APPROVED BY: Goodyear Standards and Policies Committee 7/97	CATCH BASIN ACCESS FRAME AND COVER	DETAIL NO.
G-3530				G-3530

SIZE OF OUTFALL CONDUIT	FRAME ANGLES	SHEAR PIN CLIP ANGLES	SHEAR PINS	ANCHOR BOLTS	HINGE PINS	HINGE ANGLE	HINGE STANDARD PIPE	HINGE TO FRAME WELDS	ANGLE TO ANGLE WELDS	BARRIER BARS PLAIN	NO. OF EQUAL BARRIER BAR SPACES (HORIZ.)	NO. OF EQUAL BARRIER BAR SPACES (VERT.)	H (OUT TO OUT FRAME ANGLES)	W (OUT TO OUT FRAME ANGLES)	A	B
30"	2x2x1/4	4x4x1/4	1-1/8ø	5/8ø	1/2"ø	2x2x1/4	3/4"	1/8	1/8	1/2 ø	3	5	34"	20"	SINGLE HINGE CENTERED	
42"	2x2x1/4	4x4x1/4	2-1/8ø	5/8ø	1/2"ø	2x2x1/4	3/4"	1/8	1/8	1/2 ø	5	6	42"	32"	2 HINGES	
48"	3x3x7/16	5x3x1/4	2-1/8ø	5/8ø	3/4"ø	2-1/2x1/4	1"	1/8	1/8	1/2 ø	5	7	47"	38"	3"	1"
54"	3x3x7/16	5x3x1/4	2-1/8ø	5/8ø	3/4"ø	2x2x1/4	1"	1/8	1/8	1/2 ø	6	8	54"	44"	5"	3"
60"	3x3x7/16	5x3x1/4	2-1/8ø	5/8ø	3/4"ø	2x2x1/4	1"	1/8	1/8	1/2 ø	7	9	60"	50"	9"	4"
66"	3x3x7/16	5x3x1/4	2-1/8ø	5/8ø	3/4"ø	2x2x1/4	1"	1/8	1/8	1/2 ø	8	10	66"	56"	11"	6"
72"	4x4x5/8	5x3x1/4	2-3/16ø	5/8ø	1"ø	3x3x3/8	1-1/4"	1/8	1/8	1/2 ø	9	11	73"	62"	15"	7"
78"	4x4x5/8	5x3x1/4	2-3/16ø	5/8ø	1"ø	3x3x3/8	1-1/4"	1/8	1/8	1/2 ø	10	11	79"	68"	17"	9"
84"	4x4x5/8	5x3x1/4	2-3/16ø	5/8ø	1"ø	3x3x3/8	1-1/4"	1/8	1/8	1/2 ø	11	13	86"	74"	21"	10"
90	4x4x5/8	5x3x1/4	2-3/16ø	5/8ø	1"ø	3x3x3/8	1-1/4"	1/8	1/8	1/2 ø	12	13	92"	80"	23"	12"
96"	4x4x5/8	5x3x1/4	2-3/16ø	5/8ø	1"ø	3x3x3/8	1-1/4"	1/8	1/8	1/2 ø	12	14	98"	86"	29"	12"

DETAIL NO.				
G-3531	CITY OF GOODYEAR STANDARD DETAIL	APPROVED BY: Goodyear Standards and Policies Committee 7/97	BARRIER SPECIFICATIONS SCHEDULE	DETAIL NO. G-3531

GUTTER TRANSITION	
CURB HEIGHT	DIM 'A'
4"	3'–3"
5"	2'–6"
6"	1'–9"

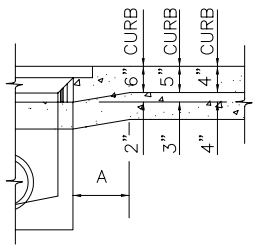

DEPRESSED GUTTER

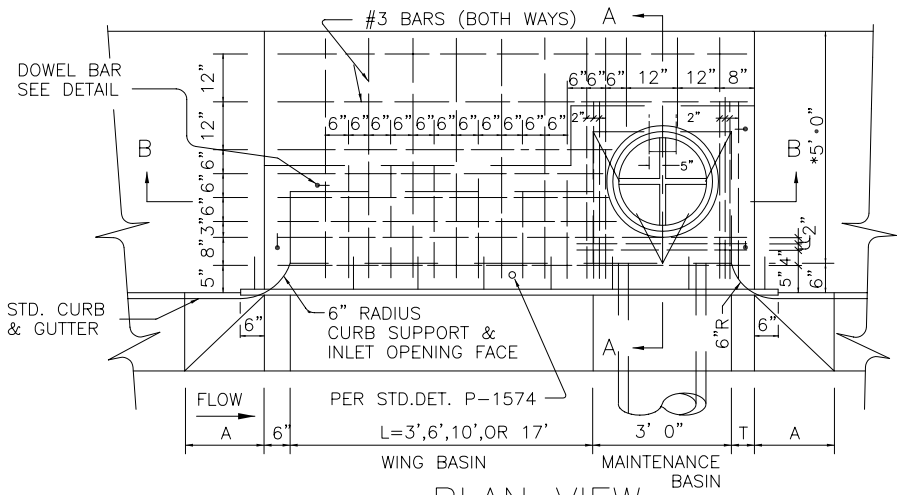

PLAN VIEW

NOTES

1. TYPES ARE DESIGNATES AS FOLLOWS: 'M'.. NO WING, 'M–1'.. ONE WING, 'M–2'.. TWO WINGS.
2. ALL CONCRETE SHALL BE CLASS 'A'.
3. ALL REINFORCING STEEL SHALL BE DEFORMED BARS AMD SHALL CONFORM TO A.S.T.M. SPECIFICATION 615.
4. CONNECTOR PIPES SHALL BE PLACED IN THE APPROPRIATE WALL OF THE MAINTENANCE BASIN.
5. FLOOR OF BASIN SHALL BE TROWELLED TO A HARD, SMOOTH SURFACE AND SHALL SLOPE FROM ALL DIRECTIONS TO OUTLET.
6. CONSTRUCTION DRAINS SHALL BE INSTALLED IN ALL INLETS BUILT WITH PAVING PROJECTS.
7. LOCATE WING BASIN ON UPSTREAM SIDE OF MAINTENANCE BASIN FOR TYPE M–1. WING BASINS FOR TYPE M–2 SHALL BE BOTH SIDES OF MAINTENANCE BASIN.
8. STEPS (M.A.G. DET. 428 POLYPROPYLENE)– V=3' (INCL.), PLACE ONE STEP 12" ABOVE THE FLOOR OF THE BASIN. V OVER 3', PLACE STEPS AT 12" INTERVALS FROM THE FLOOR OF THE BASIN WITH THE TOP STEP AT 12" (MIN.) BELOW THE TOP OF THE GRATE.
9. ACCESS FRAME AND COVER PER DET. G–3530

TRANSITION (BOTH SIDES)

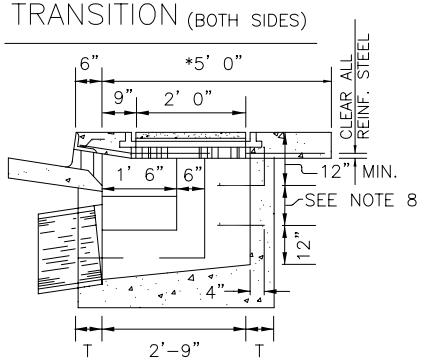

SECTION A – A

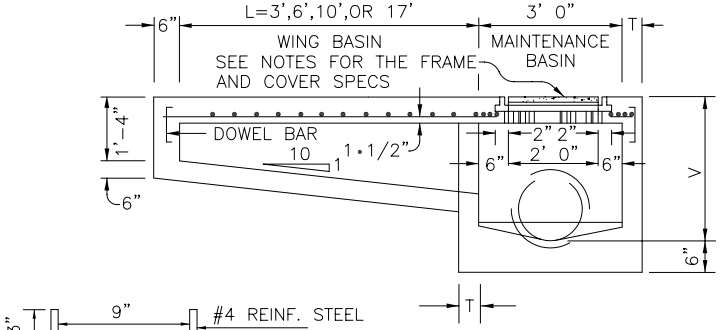

SECTION B – B

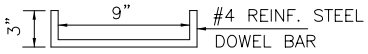

DOWEL BAR DETAIL

CATCH BASIN WALL THICKNESS
T = 6" IF V = 4' OR LESS T = 8" IF V = 4' TO 8' (IF V EXCEEDS 8', SPECIAL DESIGN IS REQUIRED.)
L = 0' UNLESS SPECIFIED ON THE PLANS V = 3'–6" MIN. WHEN L = 0:3' OR 6' V = 4'–0" MIN WHEN L = 10' OR 17'

*4'–0" IN LOCATIONS WHERE 4' SIDEWALK IS REQ'D.

DETAIL NO.	CITY OF GOODYEAR STANDARD DETAIL	APPROVED BY: Goodyear Standards and Policies Committee 7/97	CATCH BASIN TYPE 'M'	DETAIL NO.
G-3535-1				G-3535-1

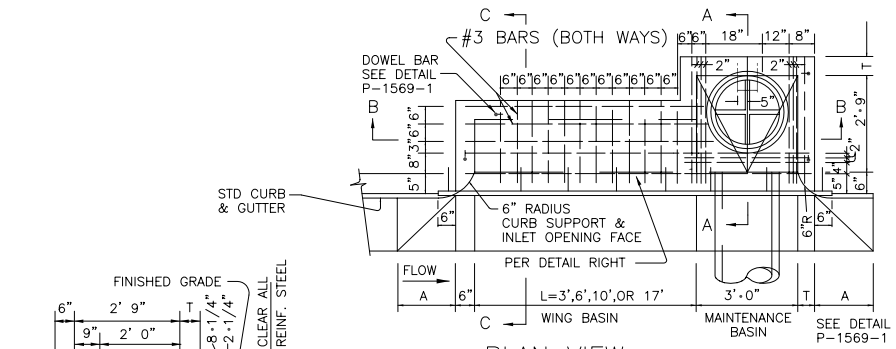

PLAN VIEW

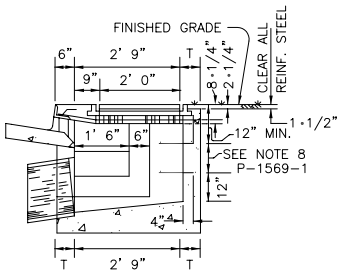

SECTION A – A

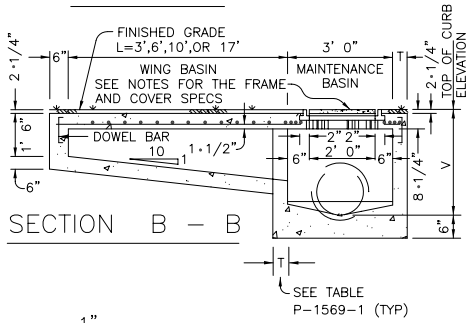

SECTION B – B

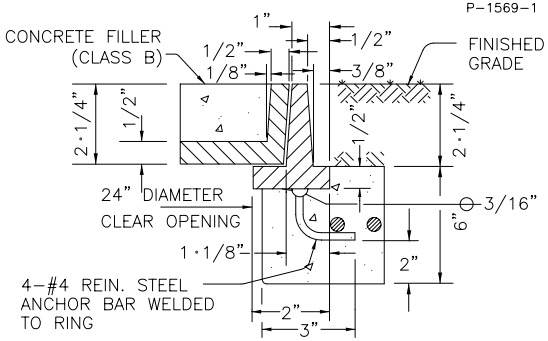

ACCESS FRAME & COVER

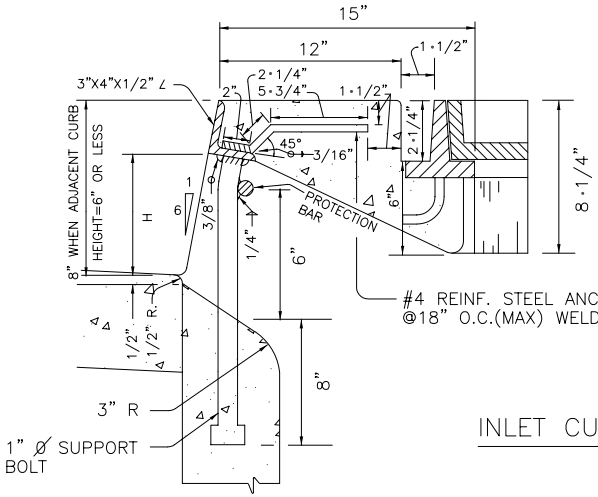

INLET CURB OPENING

NOTES:

SEE STANDARD DETAILS G-3530 AND G-3535-1 CONSTRUCTION NOTES NOTES AND ADDITIONAL DETAILS.

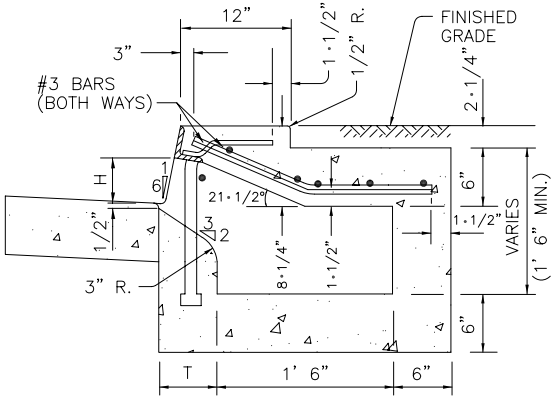

SECTION C – C

DETAIL NO. G-3535-2	CITY OF GOODYEAR STANDARD DETAIL	APPROVED BY: Goodyear Standards and Policies Committee 7/97	'M' BASIN TOP MODIFICATION IN LANDSCAPE PARKWAY	DETAIL NO. G-3535-2

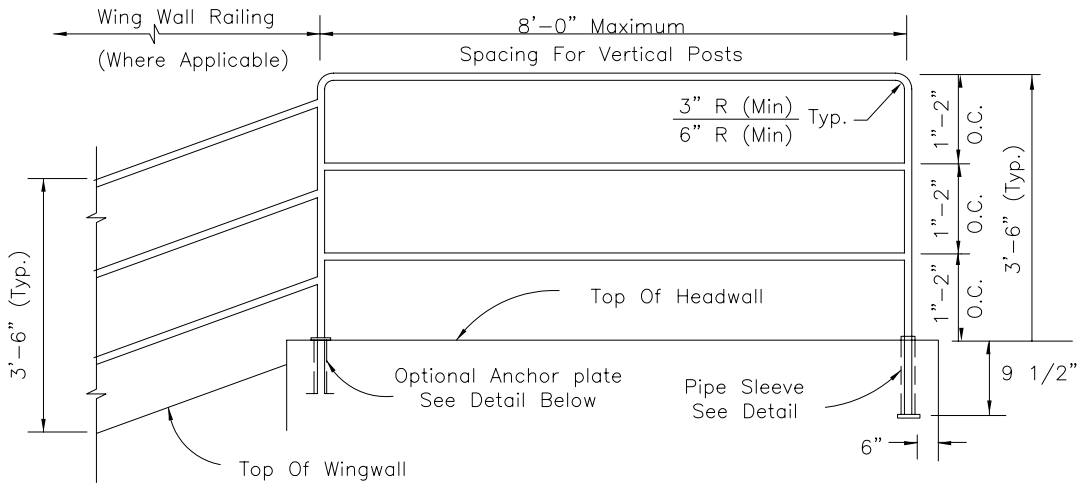

ELEVATION

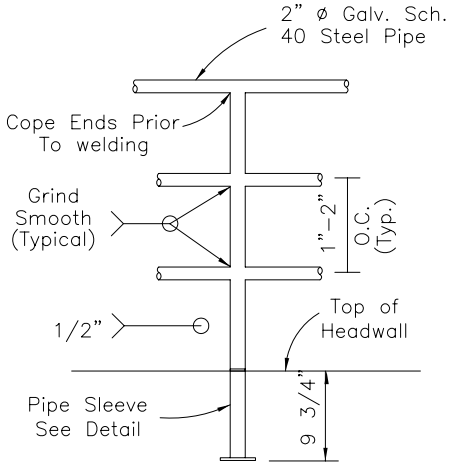

VERTICAL POST DETAIL

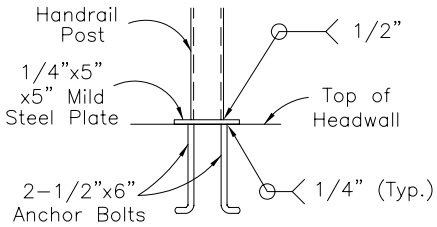

OPTIONAL ANCHOR PLATE DETAIL #1

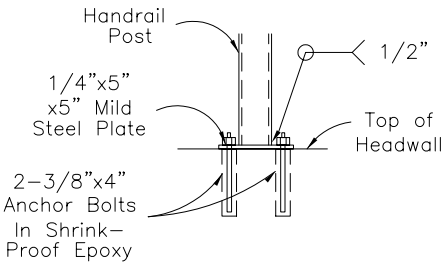

OPTIONAL ANCHOR PLATE DETAIL #2

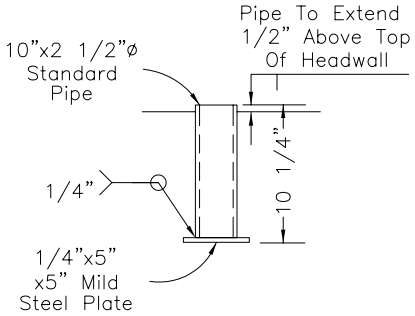

PIPE SLEEVE DETAIL

CONSTRUCTION NOTES

1. Paint handrail per ADOT Specifications. Color: Beige or as per plans.
2. Vertical posts to be evenly spaced.

DETAIL NO.				DETAIL NO.
G-3560	CITY OF GOODYEAR STANDARD DETAIL	APPROVED BY: Goodyear Standards and Policies Committee 7/97	HANDRAIL DETAIL	G-3560