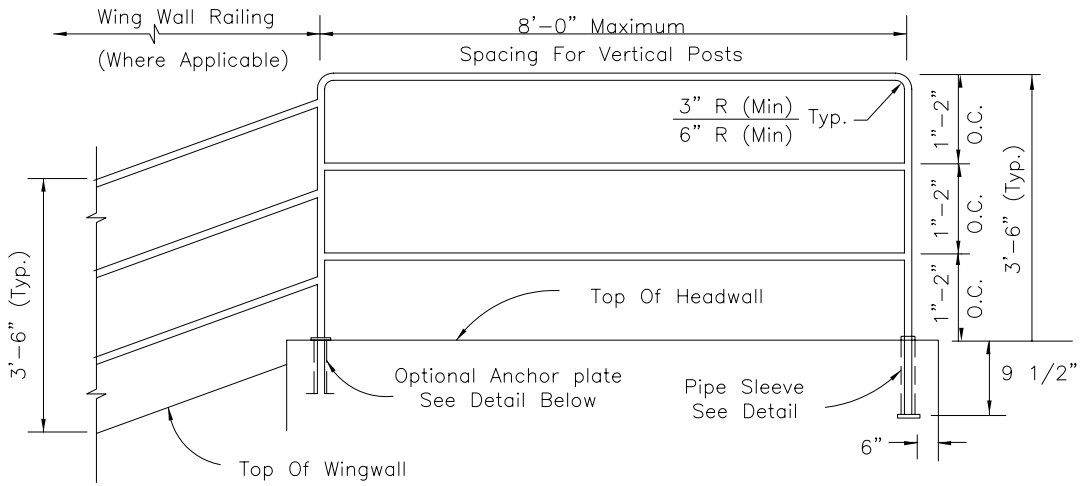

ELEVATION

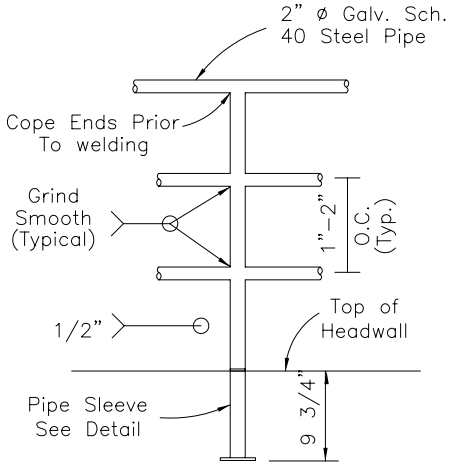

VERTICAL POST DETAIL

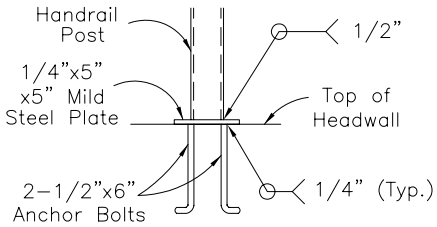

OPTIONAL ANCHOR PLATE DETAIL #1

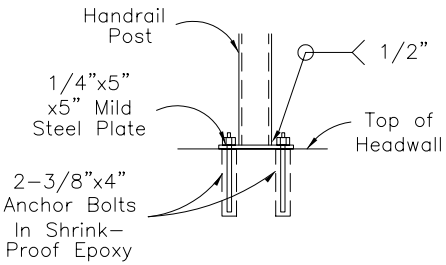

OPTIONAL ANCHOR PLATE DETAIL #2

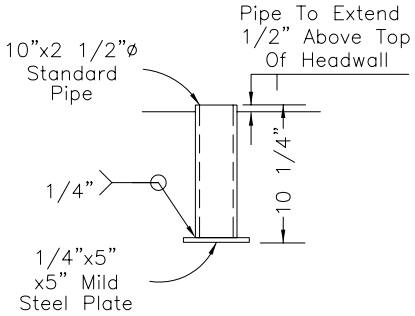

PIPE SLEEVE DETAIL

CONSTRUCTION NOTES

1. Paint handrail per ADOT Specifications. Color: Beige or as per plans.
2. Vertical posts to be evenly spaced.

DETAIL NO.				DETAIL NO.
G-3560	CITY OF GOODYEAR STANDARD DETAIL	APPROVED BY: Goodyear Standards and Policies Committee 7/97	HANDRAIL DETAIL	G-3560